SUUNTO

2021 BUYER'S GUIDE

SUUNTO INTERNATIONAL LIMITED WARRANTY

Suunto warrants that during the Warranty Period Suunto or a Suunto Authorized Service Center (hereinafter Service Center) will, at its sole discretion, remedy defects in materials or workmanship free of charge either by a) repairing, or b) replacing, or c) refunding, subject to the terms and conditions of this International Limited Warranty. This International Limited Warranty is valid and enforceable regardless of the country of purchase. The International Limited Warranty does not affect your legal rights, granted under mandatory national law applicable to the sale of consumer goods.

WARRANTY PERIOD

The International Limited Warranty Period starts at the date of original retail purchase. The Warranty Period is two (2) years for Products and Dive transmitters unless otherwise specified. The Warranty Period is one (1) year for accessories including but not limited to wireless sensors, chargers, cables, rechargeable batteries, straps, bracelets and hoses.

EXCLUSIONS AND LIMITATIONS

This International Limited Warranty does not cover:

1. a) Normal wear and tear such as scratches, abrasions, or alteration of the color and/or material of non-metallic straps, b) defects caused by rough handling, or c) defects or damage resulting from use contrary to intended or recommended use, improper care, negligence, and accidents such as dropping or crushing;
2. Printed materials and packaging;
3. Defects or alleged defects caused by use with any product, accessory, software and/or service not manufactured or supplied by Suunto;
4. Non-rechargeable batteries.

Please visit **suunto.com/warranty** for more information

Picture: Jukka Saarikorpi

CONTENT

EON BLACK 6
EON CORE 7
DX 8
D6i SERIES 9
D5 10
D4i SERIES 11
D4f SERIES 12
VYPER NOVO 13
ZOOP NOVO 14
COBRA3 15
WIRELESS TANK PRESSURE TRANSMITTER 16
TANK POD 16
COMBOS 17
PRESSURE GAUGES 18
DEPTH GAUGES 18
SK-8 19
PRODUCT CHART 20
ACCESSORIES 22
PRODUCT SPECIFICATIONS 26

SUUNTO

CONQUER NEW TERRITORY

EON BLACK

SCUBALAB TESTERS CHOICE 2018

EON CORE

DX

D6i NOVO

SCUBALAB TESTERS CHOICE 2019

D5

D4i SILICONE

D4f

VYPER NOVO LITE

ZOOP NOVO

COBRA3

WIRELESS TANK PRESSURE TRANSMITTER

TANK POD

COMBOS

PRESSURE GAUGES

DEPTH GAUGES

SK-8

EON BLACK

ADVENTURE STARTS HERE

_ CHANGEABLE DIVE FEATURES
_ EXTREME DURABILITY
_ SUPERIOR VIEWING
_ WIRELESS CONNECTIVITY

Equipped with two dive algorithms, Suunto Fused™ RGBM 2 and Bühlmann 16 with Gradient Factors, the new Suunto EON Steel Black let's you choose which algorithm and ascent profile is right for your adventure and match your dive profile within your team.
The extremely durable construction with its high contrast colour screen has been tested in the toughest diving conditions.
With multi-gas support and customizable features, Suunto EON Steel Black make up a dive computer that will never let you down while exploring the deep unknown.

View product specification page for dimensions.

CHANGEABLE DIVE FEATURES

_ Newest Suunto Fused™ RGBM 2 dive algorithm to better support deep air and repetitive dives
_ Give divers the option to choose an alternative dive algorithm based on Bühlmann ZHL-16C with Gradient Factors.
_ Freedom to customise ascent profile regardless of dive algorithm
_ Suunto EON Steel Black supports multiple diving modes: Gauge/Air/Nitrox/Trimix/CCR (fixed point) and includes multiple gas support

EXTREME DURABILITY

_ Designed and built to meet the needs of the most demanding diver
_ Tested in the toughest diving conditions by top technical divers from around the world
_ Long-lasting battery life (20-40 hours of dive time with one charge) that will last even in the coldest waters
_ Dive deep – comes with guaranteed water resistance up to 150 meters

FOR ALL DIVING

_ Possibility to choose between two different dive algorithms: Suunto Fused™ RGBM 2 or Bühlmann 16 with Gradient Factors
_ Extreme durability and superior viewing to support even the most demanding dives
_ Freedom to customize ascent profile regardless of dive algorithm
_ Multi-gas support: Air/Nitrox/Trimix/CCR (fixed point)
_ Wireless connectivity with Suunto Tank PODs and Suunto App

KEY FEATURES FOR REBREATHER DIVING

_ A setpoint, non-monitoring dive computer with dedicated CCR mode
_ Configure up to 3 different diluents
_ Adjustable high and low setpoints, as well as custom setpoint during dive
_ Automatic setpoint switching at specified depths
_ Possibility to switch to open circuit mode in case of bailout

PART NUMBER	DESCRIPTION
SS050558000	EON BLACK WITH BOOT AND USB

EON CORE

OUTSTANDING READABILITY WITH FULL CUSTOMIZATION

_ EASY-TO-READ
_ CUSTOMIZABLE AND UPDATABLE
_ COMPACT AND COMFORTABLE
_ WIRELESS CONNECTIVITY

The compact Suunto EON Core is a great dive companion for beginner divers or divers actively exploring new depths. The key details of every dive are easy to read from the clear color display with large, prominent digits and intuitive menu logic.

This fully-featured and customizable dive computer is a reliable partner for exploring shipwrecks or simply admiring the colorful marine life.

EASY TO READ

_ High contrast color screen with large numbers
_ Always-on LED backlight
_ Visually intuitive, consistent presentation
_ Classic, graphical and prominent view styles

COMPACT AND COMFORTABLE

_ Lightweight
_ Rechargeable battery (10-20 hours of dive time with one charge)
_ Use with strap or bungee (bungee sold separately)
_ Simple and easy-to-use interface
_ Flip display

GROWS WITH YOU

_ Customize features with Suunto CustomDisplay™ in Suunto DM5
_ User-updatable software

CONNECT AND TRANSFER

_ Wireless tank pressure readings from up to 10 Suunto Tank PODs
_ Connect over Bluetooth to Suunto App
_ Keep a diary and share your adventures and photos in Suunto Movescount
_ Plan and customize easily with Suunto DM5

SCUBALAB TESTERS CHOICE 2018

EON CORE WHITE

EON CORE LIME

EON CORE BLACK

View product specification page for dimensions.

FOR ALL DIVING

_ Gauge/Air/Nitrox/Trimix/CCR (fixed point)
_ Suunto Fused™ RGBM for maximizing dive time
_ No-decompression dive planner
_ Tilt compensated 3D digital compass
_ Guaranteed to 80m depth

KEY FEATURES FOR REBREATHER DIVING

_ A setpoint, non-monitoring dive computer with dedicated CCR mode
_ Configure up to 3 different diluents
_ Adjustable high and low setpoints, as well as custom setpoint during dive
_ Automatic setpoint switching at specified depths
_ Possibility to switch to open circuit mode in case of bailout

PART NUMBER	DESCRIPTION
SS023081000	EON CORE WHITE WITH USB
SS023082000	EON CORE LIME WITH USB
SS022740000	EON CORE BLACK WITH USB

DX

THE ULTIMATE WATCH-SIZED DIVE COMPUTER

_ FOR REBREATHER AND OPEN CIRCUIT DIVING INCL. TRIMIX

_ TITANIUM CASE WITH SAPPHIRE CRYSTAL GLASS

_ SUUNTO FUSED™ RGBM

The DX, built on the award-winning D9tx, is the ultimate tool for open-circuit and rebreather divers. It's the very first of its kind to feature CCR compatibility. The premium design and materials, combined with the new superior Suunto Fused™ RGBM, make it the must-have instrument for your dive missions and everyday adventures. Are you ready to conquer new territory?

PART NUMBER	DESCRIPTION
SS021116000	DX SILVER ELASTOMER WITH USB

DX SILVER ELASTOMER

KEY FEATURES FOR REBREATHER DIVING

_ A setpoint, non-monitoring dive computer with dedicated CCR mode

_ Configure up to 3 different diluents

_ Adjustable high and low setpoints, as well as custom setpoint during dive

_ Automatic setpoint switching at specified depths

_ Possibility to switch to open circuit mode in case of bailout

KEY FEATURES FOR ALL DIVING

_ New, advanced Suunto Fused™ RGBM for CCR, technical, and recreational diving

_ Trimix support including helium and oxygen

_ Gas switching between up to eight gases

_ 3D tilt-compensated digital compass

_ Five modes: air, mixed gas, CCR, gauge, and off

_ Updatable firmware

_ Optional wireless air integration

_ Built-in dive planner

_ Detailed graphical logs and dive data on your PC/ Mac using Suunto DM5 software

KEY FEATURES FOR EVERYDAY ADVENTURES

_ Stunning, compact design

_ Hard-wearing premium materials: titanium case and scratch-resistant sapphire crystal glass

_ Comes with an elastomer strap

View product specification page for dimensions.

D6i SERIES

SERIOUS DIVE FEATURES IN A RUGGED STEEL CASING

_ 5 MODES INCL. FREEDIVING

_ GAS SWITCHING BETWEEN UP TO 3 GASES

_ 3D COMPASS, OPTIONAL WIRELESS AIR INTEGRATION

PART NUMBER	DESCRIPTION
SS022617000	D6i NOVO ZULU BLACK
SS022910000	D6i NOVO ZULU INSTRUCTOR BLUE
SS021956000	D6i NOVO BLACK WITH USB

D6i NOVO ZULU BLACK

D6i NOVO ZULU BLUE

For dive instructors and dive masters only

D6i NOVO BLACK

D6i is the watch-sized dive computer of choice for those who take diving seriously. Including a tilt-compensated digital compass and wireless air integration, D6i is in favor with professional divers. D6i Novo White, D6i Novo Black, D6i Novo Stone and D6i Novo Stealth all come with a comfortable silicone strap. The new, refined D6i Novo Zulu comes in three colors: black, stealth and blue. The extremely durable textile Zulu strap is originally designed for military use and can take heavy-duty wear and tear. It's easy to adjust on wetsuit but also most comfortable around the wrist when not diving.

KEY FEATURES:

_ Steel case and sapphire crystal glass with anti-reflective coating
_ Full continuous decompression algorithm – Suunto RGBM
_ Gas switching between up to 3 gases
_ Five modes: air, nitrox, gauge, free and off
_ Innovative apnea timer, and a timer in air/nitrox modes
_ Integrated tilt-compensated 3D digital compass
_ Updateable firmware
_ Optional wireless air integration – current cylinder pressure, remaining air time
_ Built-in dive planner
_ Detailed graphical logs and dive data on your PC/Mac using Suunto DM5 software

View product specification page for dimensions.

D5

EXPLORE IN STYLE

_ MULTIPLE ACCESSORY COLOR STRAP OPTIONS
_ FUSED 2 RGBM
_ CONNECTS TO NEW SUUNTO APP

The D5 is not only a diver's best friend underwater, it also adapts to every diver's style with multiple strap options to match any outfit. Divers can read their most important dive details and see tank pressure effortlessly on the new super clear color screen, as well as log and share their experiences with the new Suunto app. The D5 is the perfect dive computer for divers that want to explore in style.

KEY FEATURES:

_ Modes: Air / Nitrox / Free / Gauge / Watch
_ Exchangeable straps with Quick Release spring bar (both for diving and for everyday style)
_ Weight: 90g
_ Rechargeable lithium-ion battery
_ Water resistance 100m
_ Full color MIP display with adjustable LED backlight
_ Wireless connectivity via Bluetooth to new Suunto App
_ Vibration alarm
_ Suunto Fused 2™ RGBM decompression model
_ Wireless tank pressure up to 3 tank pressure readings (with Tank Pod)
_ User-updatable software & customizable dive screens
_ 18 languages
_ Tilt compensated 3D digital compass

SCUBALAB TESTERS CHOICE 2019

D5 WHITE

D5 BLACK

D5 COPPER

D5 ALL BLACK

PART NUMBER	DESCRIPTION
SS050181000	SUUNTO D5 WHITE W/ USB
SS050190000	SUUNTO D5 BLACK W/ USB
SS050569000	SUUNTO D5 COPPER W/ USB
SS050192000	SUUNTO D5 ALL BLACK W/ USB

View product specification page for dimensions.

D4i Silicone

THE GREAT ALL-ROUND DIVE COMPUTER

_4 MODES INCL. FREEDIVING

_LIGHT WEIGHT

_OPTIONAL WIRELESS AIR INTEGRATION

The redesigned D4i comes in a range of fresh colors and with an all-new soft, comfortable silicone strap for that perfect fit. Lightweight and packed with handy features like freedive mode and optional wireless air integration, it's got everything you need – wherever your diving may take you.

KEY FEATURES:

_ Full continuous decompression algorithm– Suunto RGBM
_ Four modes: air, nitrox, free and off
_ Innovative apnea timer, and a timer in air/nitrox modes
_ Updatable firmware
_ Optional wireless air integration – current cylinder pressure, remaining air time
_ Built-in dive planner
_ Detailed graphical logs and dive data on your PC/Mac using Suunto DM5 software

D4I SILICONE BLACK

D4I SILICONE LIME

D4I SILICONE WHITE

PART NUMBER	DESCRIPTION
SS050277000	D4I SILICONE, BLACK
SS050279000	D4I SILICONE, LIME
SS050278000	D4I SILICONE, WHITE

View product specification page for dimensions.

SUUNTO D4f

SPECIALIZED FREEDIVE COMPUTER

_IDEAL FOR FREEDIVING, SNORKELING AND SPEARFISHING

_APNEA TIMER*

_MAXIMUM DEPTH 100M

_LIGHT-WEIGHT

D4f BLACK

Suunto D4f is a light yet robust freedive computer, that makes underwater sports enjoyable. When diving, the D4f displays your present and maximum depth and calculates dive time and surface intervals for you, allowing you to fully concentrate on exploring the underwater world. Use the apnea timer to improve your breathing technique. After the dive you can browse the details of your dive from the logbook. The light-weight case with stainless steel bezel and mineral crystal glass make Suunto D4f not only a trusted tool when exploring the depths, but also looks good wearing day to day.

The D4F Black comes with a comfortable elastomer strap. The USB cable for uploading your dives to DM5 and Suunto Movescount is sold separately.

View product specification page for dimensions.

KEY FEATURES

_ Freediving mode
_ Innovative apnea timer
_ Stop watch
_ Updateable firmware
_ Detailed graphical logs and dive data with your PC/Mac using Suunto DM5 software (USB cable sold separately)

* WARNING: *Anyone who engages in any form of breath hold diving is in danger of shallow-water blackout (SWB), the suddenloss of consciousness caused by oxygen starvation.*

PART NUMBER	DESCRIPTION
SS023198000	D4F BLACK

VYPER NOVO LITE

DIVE TO THE NEXT LEVEL

_ 5 MODES AND OPTIONAL WIRELESS AIR INTEGRATION

_ DIGITAL COMPASS AND GAS SWITCHING

When you're ready to take diving to the next level, Vyper Novo is the perfect new dive buddy to take along. Super-solid and nitrox-capable, it's packed with advanced features that open up new possibilities for exploring the depths, including optional wireless air integration, a digital compass, and gas switching. Just like you, it's ready for anything.

KEY FEATURES:

_ Optional wireless air integration – current cylinder pressure, remaining air time
_ Integrated tilt-compensated 3D digital compass
_ Gas switching between up to three gases (Oxygen up to 99%)
_ Optional cable (not included) for connecting to detailed graphical logs and dive data with your PC/Mac using Suunto DM5 software (optional)
_ Full continuous decompression algorithm - Suunto RGBM
_ Five modes: air, nitrox, gauge, free and off
_ Innovative apnea timer for free diving, and a timer in air/nitrox modes
_ Updatable firmware
_ Built-in dive planner

VYPER NOVO GRAPHITE

VYPER NOVO WHITE

View product specification page for dimensions.

PART NUMBER	DESCRIPTION
SS050434000	VYPER NOVO GRAPHITE LITE (W/O USB)
SS050433000	VYPER NOVO WHITE LITE (W/O USB)

ZOOP NOVO

MAKE DIVING SIMPLE

_ AIR, NITROX, GAUGE AND FREEDIVE MODES
_ BIG, CLEAR DISPLAY WITH BACKLIGHT
_ MADE IN FINLAND

Whether you're just starting out on your diving journey or looking to explore new underwater adventures, Zoop Novo has everything you need. With your key dive data available at a glance on the big, super-bright backlit display, all you need to do is suit up, dive down, and enjoy the view. This great-value nitrox-capable dive computer includes full decompression capabilities and five dive modes.

KEY FEATURES:

_ Five modes: air, nitrox, gauge, free and off
_ Full continuous decompression algorithm - Suunto RGBM
_ Innovative apnea timer for free diving, and a timer in air/nitrox modes
_ Updatable firmware
_ Built-in dive planner
_ Detailed graphical logs and dive data with your PC/Mac using Suunto DM5 software (no cable in the package – sold as an accessory)

Metric gauges not available in US market.

ZOOP NOVO BLACK

ZOOP NOVO BLUE

ZOOP NOVO LIME

CB-TWO IN LINE
ZOOP LIME COMBO

CB-TWO IN LINE
ZOOP BLACK COMBO

PART NUMBER	DESCRIPTION
SS021645000	ZOOP NOVO BLACK
SS021644000	ZOOP NOVO BLUE
SS021643000	ZOOP NOVO LIME
SS022219000	CB-2 IN LINE/4000/ZOOP NOVO LIME COMBO
SS022220000	CB-2 IN LINE/4000/ZOOP NOVO BLACK COMBO
SS022217000	CB-2 IN LINE/300/ZOOP NOVO LIME COMBO
SS022218000	CB-2 IN LINE/300/ZOOP NOVO BLACK COMBO

COBRA3

ADVANCED CONSOLE-MOUNTED DIVE COMPUTER WITH AIR INTEGRATION

_ AIR, NITROX, AND GAUGE MODES
_ BACKLIGHT
_ LARGE, EASY-TO-READ DIGITS
_ 3D COMPASS

Cobra3 is an all-in-one console-mounted dive computer. It features air integration, an electronic 3D compass, an easy-to-read matrix display, and simplified four-button operation.

KEY FEATURES:

_ Air-integrated for tank pressure information
_ Tiltable electronic 3D compass to keep you on course
_ User friendly design featuring easy-to-read matrix display and simplified four-button operation
_ Three dive modes and gas switching capability for a range of dive situations
_ Continuous decompression with the Suunto RGBM algorithm
_ Built-in dive simulator and dive planner
_ Detailed graphical logs and dive data on your PC/Mac using Suunto DM5 software

COBRA 3

PART NUMBER	DESCRIPTION
S018537000	COBRA3
SS018536000	COBRA3 WITH Q/R AND USB

WIRELESS TANK PRESSURE TRANSMITTER

_ COMPATIBLE WITH SUUNTO AIR-INTEGRATED DIVE COMPUTERS (EXCEPT FOR EON FAMILY AND D5)

_ GREEN LED LIGHT TO INDICATE DATA SENDING

_ BATTERY LIFE APPROX. 2 YEARS (100 DIVES/YEAR)

The wireless tank pressure transmitter gives you current tank pressure and remaining air time with just a glance at your wrist. Before your dive, simply pair the transmitter with your dive computer and you're good to go. The transmitter's handy green LED light lets you know that it's on.

PART NUMBER	DESCRIPTION
SS019098000	WIRELESS TANK PRESSURE TRANSMITTER LED

SUUNTO TANK POD

WIRELESS TANK PRESSURE TRANSMITTER FOR EON FAMILY

_ EASY PAIRING

_ MULTIPLE TANK PRESSURE READINGS

_ ROBUST DIGITAL COMMUNICATIONS TECHNOLOGY

The Tank POD is a wireless tank pressure transmitter that allows you to view current tank pressure with just a glance at your wrist. The robust digital communications technology brings not only improved stability but also new features such as multiple tank pressure readings.

PART NUMBER	DESCRIPTION
SS020306000	TANK POD MULTI (FOR EON FAMILY AND D5)

COMBOS

THE COMBO CONSOLES ALLOW YOU TO CREATE A PERSONAL COMBO ACCORDING TO YOUR OWN SPECIFIC NEEDS.

KEY FEATURES:

_ Outstanding quality, reliability and accuracy
_ Compatible with Suunto Quick Release
_ Suitable for sub-zero temperatures
_ Light, durable and flexible Miflex hose
_ Combo configuration upgradable with easy-to-attach modules
_ Luminous easy-to-read analog dials
_ Reliable and accurate open bourdon tube mechanism
_ Maximum depth indicator

PART NUMBER	DESCRIPTION
SS005240200	CB-ONE/300 BAR
SS005240300	CB-ONE/4000 PSI
SS005249210	CB-2TWO IN LINE/300 BAR/45 M COMBO
SS005249220	CB-TWO IN LINE/300 BAR/70 M COMBO
SS005249330	CB-TWO IN LINE/4000 PSI/150 FT COMBO
SS005249340	CB-TWO IN LINE/4000 PSI/230 FT COMBO
SS005502000	QUICK RELEASE

CB-ONE

_ Basic console housing for SM-36 pressure gauge modules

CB-TWO IN LINE

_ SM-36 pressure gauge module (300 bar/4000 psi)
_ SM-16 depth gauge (45 m/70 m/150 ft/230 ft) or with dive computer

QUICK RELEASE

_ Quick release system for pressure gauges and SM-36 pressure gauges, Suunto Combos and Cobra/Cobra3 dive computers

PRESSURE GAUGES

_ STREAMLINED, LOW PROFILE GAUGE

_ SM-36 IMPERIAL OR METRIC PRESSURE GAUGE

PART NUMBER	DESCRIPTION
SS005100200	SM-36/300 BAR W/ HOSE W/ SLEEVE
SS005100300	SM-36/4000 PSI W/ HOSE W/ SLEEVE
SS05108M200	SM-36/300 BAR W/O HOSE W/O SLEEVE
SS05108M300	SM-36/4000 PSI W/O HOSE W/O SLEEVE
SS005108300	SM-36/4000 PSI W/ SLEEVE

ANALOG

DEPTH GAUGES

_ RELIABLE BOURDON TUBE MECHANISM

_ MAXIMUM DEPTH INDICATOR

_ AVAILABLE IN FEET (150 AND 230) OR METERS (45 AND 70)

PART NUMBER	DESCRIPTION
SS05040M020	SM-16/70 M DEPTH GAUGE
SS05040M030	SM-16/150 FT DEPTH GAUGE
SS05040M040	SM-16/230 FT DEPTH GAUGE

SUUNTO.COM 888.270.8595 #SUUNTODIVE

SK-8

THE WORLD'S MOST POPULAR DIVE COMPASS

_ HIGH QUALITY LIQUID-FILLED DIVE COMPASS

_ PHOSPHORESCENT COMPASS CARD

_ HIGH TILT POTENTIAL (+/- 30°)

_ STRAP, BUNGEE OR CONSOLE-MOUNTED

_ UPGRADED MAGNET

The SK-8 has been optimized for faster stabilization and enhanced readability. Both northern and southern hemisphere models can be used over a wider area of the globe thanks to an upgraded magnet.

The superior SK-8 has an exceptional tilt potential of +/-30 degrees, which is 2 to 3 times larger than conventional diving compasses. The firm-grip bezel with a ratchet at every fifth degree is specially designed to prevent sand and dirt contamination, allowing smooth turning in all conditions.

By adding the SK-8 compass to different Suunto Combo consoles, you can create a personal console that meets your specific needs. For example, CB-Double can be made by adding the SK-8/DS compass to the reverse side of the CB-One. Or you can configure your CB-One console to a CB-Two by adding an SK-8 compass on top. If you add the SK-8/DS compass on to the reverse side of the CB-Two In Line, you get a CB Double In Line. And CB-Three In Line console is made by adding a SK-8 compass on top of a Two In Line console.

METRIC GAUGES NOT AVAILABLE IN US MARKET.

SK-8 BUNGEE MOUNT

SK-8 STRAP MOUNT

SK-8 CONSOLE MOUNT, FRONT

SK-8 CONSOLE MOUNT, BACK

PART NUMBER	DESCRIPTION
SS021118000	SK-8 DIVING COMPASS BUNGEE BOOT
SS020981000	SK-8 DIVING COMPASS WRIST STRAP*
SS021122000	SK8 COMPASS COMBO MODULE TOP
SS021123000	SK8 COMPASS COMBO MODULE BACK
SS021120000	SK-8 CAPSULE REPLACEMENT ONLY
1-0104-03	SK7/8 COMPASS RETRACTOR*

**Retracto is used in combination with the Wrist Unit - SS020981000 Straps are removed and the retractor slides into the boot*

SUUNTO PRODUCT CHARTS

	EON BLACK	EON CORE	DX	D6i NOVO	D5
REBREATHER (CCR)	Fixed point CCR	Fixed point CCR	Fixed point CCR		
TRIMIX (MIXED GAS)	●	●	●		
NITROX (AND AIR)	●	●	●	●	●
FREEDIVING				●	●
GAUGE	●	●	●	●	●
CUSTOM DISPLAYS	5 per dive mode	5 per dive mode			●
VISUAL STYLE OF THE DISPLAY	Classic / Graphical / Prominent	Classic / Graphical / Prominent			Classic / Graphical
USER-UPDATABLE FIRMWARE	●	●	●		●
DIGITAL COMPASS	●	●	●	●	●
STOPWATCH	●	●	●	●	●
BATTERY	rechargeable lithium-ion	rechargeable lithium-ion	CR2450	CR2450	rechargeable lithium-ion
TANK PRESSURE	Wireless (optional) [8]	Wireless (optional) [8]	Wireless (optional)	Wireless (optional)	Wireless (optional)
MULTIPLE TANK PRESSURE READING	●	●			●
GAS SWITCHING	●	●	●	●	●
DISPLAY TYPE	Color	Color	Matrix	Matrix	Color
SAFETY STOP	●	●	●	●	●
DEEP STOP	●	●	●	●	●
TEMPERATURE	●	●	●	●	●
BACKLIGHT	●	●	●	●	●
INCLUDES USB CABLE	●	●	●	●	●
WATER RESISTANCE	150 m (492 ft)	80 m (262 ft)	200 m (656 ft)	150 m (492 ft)	100 m (328 ft)
ASCENT TIME DISPLAY	0 - 999 min	0 - 999 min	0 - 999 min	0 - 199 min	0 - 999 min
LOGBOOK MEMORY[7]	~200 h	~200 h	~140 h[1]	~140 h[2]	~200 h
DIVE HISTORY	Lifetime	Lifetime	Lifetime	Lifetime	Lifetime
SAMPLING RATES	10 s	10 s	10, 20, 30, 60 s	1, 2, 5, 10, 20, 30, 60 s[3]	10 s
DECOMPRESSION MODEL	Suunto Fused RGBM 2	Suunto Fused RGBM 2	Suunto Fused™ RGBM	SUUNTO RGBM	Suunto Fused RGBM 2
GASES	Up to 10 gases Oxygen 5-99% Helium 0-95%	Up to 10 gases Oxygen 5-99% Helium 0-95%	Up to 8 gases Oxygen 5-99% Helium 0-95%	Up to 3 gases Oxygen 21-99%	Up to 3 gases Oxygen 21-99%

[1] Default factory setting without transmitter data. With transmitter data minimum 35 hours of memory capacity.
[2] Default factory setting without transmitter data. With transmitter data minimum 35 hours of memory capacity. In Free Dive mode up to 35 hours of memory capacity.
[3] 1, 2 and 5 s sampling rates only in Free Dive mode.
[4] Default factory setting. Can go up to 128 hours.
[5] Default factory setting. Can go up to 240 hours.

SUUNTO PRODUCT CHARTS

D4i

D4F

COBRA3

VYPER NOVO LITE

ZOOP NOVO

D4i	D4F	COBRA3	VYPER NOVO LITE	ZOOP NOVO	
					REBREATHER (CCR)
					TRIMIX (MIXED GAS)
●		●	●	●	NITROX (AND AIR)
●	●		●	●	FREEDIVING
		●	●	●	GAUGE
					CUSTOM DISPLAYS
					VISUAL STYLE OF THE DISPLAY
					USER-UPDATABLE FIRMWARE
		●	●		DIGITAL COMPASS
●	●		●	●	STOPWATCH
CR2450	CR2450 User replaceable[10]	CR2450 User replaceable[10]	CR2450 User replaceable[10]	CR2450 User replaceable[10]	BATTERY
Wireless (optional)		Hose	Wireless (optional)		TANK PRESSURE
					MULTIPLE TANK PRESSURE READING
		●	●		GAS SWITCHING
Matrix	Matrix	Matrix	Matrix	Matrix	DISPLAY TYPE
●		●	●	●	SAFETY STOP
●		●	●	●	DEEP STOP
●	●	●	●	●	TEMPERATURE
●	●	●	●	●	BACKLIGHT
(Optional)	(Optional)	(Optional)	(Optional)		INCLUDES USB CABLE
100 m (328 ft)	100 m (328 ft)	100 m (328 ft)	80 m (262 ft)	80 m (262 ft)	WATER RESISTANCE
0 - 199 min		0 - 99 min	0 - 199 min	0 - 199 min	ASCENT TIME DISPLAY
~140 h[2]	~4 h[2]	~42 h[4]	~140 h[2]	~140 h[2]	LOGBOOK MEMORY[7]
Lifetime	Lifetime	Lifetime	Lifetime	Lifetime	DIVE HISTORY
1, 2, 5, 10, 20, 30, 60 s[3]		1, 10, 20, 30, 60 s	1, 2, 5, 10, 20, 30, 60 s[3]	1, 2, 5, 10, 20, 30, 60 s[3]	SAMPLING RATES
SUUNTO RGBM		SUUNTO RGBM	SUUNTO RGBM	SUUNTO RGBM	DECOMPRESSION MODEL
1 gas Oxygen 21-50%		Up to 2 gases Oxygen 21-99%	Up to 3 gases Oxygen 21-99%	1 gas Oxygen 21-50%	GASES

[6] In the Dive Air mode and Dive Nitrox mode, the default sampling rate is 20 s. You can select other sampling rates with the optional USB Interface Cable and DM5 software.
[7] 20 s sampling rate.
[8] With the new Tank POD.
[9] D4i AND D4f Black does not include a USB cable.
[10] Using the original battery kit is highly recommended.

ACCESSORIES

INTERFACE CABLES	
SS020307000	EON BLACK INTERFACE USB CABLE
SS018214000	D-SERIES/ZOOP NOVO/VYPER NOVO USB INTERFACE
SS011350000	HELO2/COBRA/VYPER/ZOOP USB INTERFACE

PROTECTIVE COVERS	
SS011736000	SOFT POUCH FOR WRIST COMPUTERS
SS021027000	EON SCRATCH GUARD (1 PC)
SS022769000	EON CORE SCRATCH GUARD
SS013587000	D-SERIES SCRATCH GUARDS (2 PCS)
SS012605000	D6/D6i LENS SHIELD KIT
SS005501000	DISPLAY SHIELD MOSQUITO/D3/ STINGER/SPYDER (2 PCS)
SS0V5850000	COBRA DISPLAY SHIELD
SS013126000	HELO2/VYPER2/VYPER AIR DISPLAY SHIELD KIT
SS0V5875000	VYTEC/VYPER DISPLAY SHIELD
SS013145000	COBRA2/3 DISPLAY SHIELD
SS021769000	ZOOP NOVO/VYPER NOVO - DISPLAY SHIELD GUARD

BATTERY KITS (USER SERVICEABLE)	
SS023242000	BATTERY KIT ZOOP NOVO/ VYPER NOVO (2 PCS)
SS023243000	BATTERY KIT ZOOP/ VYPER/COBRA (2 PCS)

BATTERY KITS (SERVICE CENTERS ONLY)	
SS023244000	BATTERY KIT STINGER/ SPYDER (2 PCS)
SS023245000	BATTERY KIT MOSQUITO/ D3 (2 PCS)
SS023241000	BATTERY KIT D-SERIES (2 PCS)

ACCESSORIES

EON BLACK	
SS050562000	SUUNTO STRAP REPLACEMENT KIT EON STEEL LIME
SS050680000	SUUNTO STRAP REPLACEMENT KIT EON STEEL BLACK
SS050679000	SUUNTO BUNGEE ADAPTER KIT EON STEEL LIME

EON CORE	
SS022768000	EON CORE STRAP KIT
SS022769000	EON CORE SCRATCH GUARD
SS023283000	BUNGEE ADAPTER KIT EON CORE
SS022993000	EON CORE USB CABLE MAGNETIC BLK

DX BRACELETS AND STRAPS	
Note: DX strap accessory kits do not contain an extension strap	
SS019554000	DX BLACK TITANIUM BRACELET KIT
SS018204000	DX/D9tx SILVER TITANIUM BRACELET KIT
SS021320000	DX BLACK ELASTOMER STRAP REPLACEMENT KIT
SS021321000	DX BLACK EXTENSION STRAP KIT
SS021263000	DX SILVER/D9tx ELASTOMER STRAP REPLACEMENT KIT
SS021264000	DX SILVER/D9tx EXTENSION STRAP KIT

ACCESSORIES

D5 STRAPS	
SS050196000	SUUNTO Q/R SILICONE EXTENSION STRAP BLACK
SS050197000	SUUNTO Q/R SILICONE EXTENSION STRAP WHITE
SS050198000	SUUNTO Q/R SILICONE EXTENSION STRAP LIME
SS050245000	SUUNTO Q/R SILICONE EXTENSION STRAP BLUE
SS050249000	SUUNTO Q/R SILICONE EXTENSION STRAP AMBER
SS050246000	SUUNTO Q/R SILICONE EXTENSION STRAP SAKURA
SS050247000	SUUNTO Q/R SILICONE EXTENSION STRAP OCEAN
SS050248000	SUUNTO Q/R SILICONE EXTENSION STRAP CORAL
SS050208000	SUUNTO Q/R SILICONE STRAP LIME/BLACK M
SS050206000	SUUNTO Q/R SILICONE STRAP BLACK/STEEL M
SS050207000	SUUNTO Q/R SILICONE STRAP WHITE/STEEL M
SS050240000	SUUNTO Q/R SILICONE STRAP BLUE/BLACK M
SS050241000	SUUNTO Q/R SILICONE STRAP SAKURA/BLACK M
SS050242000	SUUNTO Q/R SILICONE STRAP OCEAN/BLACK M
SS050243000	SUUNTO Q/R SILICONE STRAP CORAL/BLACK M
SS050244000	SUUNTO Q/R SILICONE STRAP AMBER/BLACK M
SS050264000	SUUNTO Q/R TEXTILE ZULU STRAP STEALTH/BLK L
SS050263000	SUUNTO Q/R TEXTILE ZULU STRAP BLACK/BLACK L
SS050265000	SUUNTO Q/R TEXTILE ZULU STRAP INSTRUCTOR BLUE/BLACK L

D5 NON DIVE STRAPS	
SS050012000	SILICONE STRAP AMBER/GRAY M (Non Dive)
SS050220000	SILICONE STRAP CORAL/GRAY M (Non Dive)
SS050221000	SILICONE STRAP BLACK/BLACK M (Non Dive)
SS050222000	SILICONE STRAP GRAPHITE/GRAY M (Non Dive)
SS050223000	SILICONE STRAP SANDSTONE/GRAY M (Non Dive)
SS050158000	SILICONE STRAP BLACK/BLACK M (Non Dive)
SS050224000	SILICONE STRAP WHITE/STEEL S+M (Non Dive)
SS050225000	SILICONE STRAP BLACK/BLACK S+M (Non Dive)
SS050226000	SILICONE STRAP LIME/BLACK S+M (Non Dive)
SS050105000	SILICONE STRAP BLACK/BLACK M (Non Dive)
SS050106000	SILICONE STRAP WHITE/STEEL M (Non Dive)
SS050155000	SILICONE STRAP BLACK/STEEL M (Non Dive)
SS050156000	SILICONE STRAP WHITE/STEEL M (Non Dive)
SS050157000	SILICONE STRAP LIME/BLACK M (Non Dive)
SS050228000	TEXTILE STRAP BLACK/BLACK M+L (Non Dive)
SS050229000	TEXTILE STRAP FOLIAGE/GRAY M+L (Non Dive)
SS050230000	TEXTILE STRAP CONCRETE/BLACK M+L (Non Dive)
SS050231000	LEATHER STRAP BLACK/BLACK M (Non Dive)
SS050232000	LEATHER STRAP BROWN/BLACK M (Non Dive)

ACCESSORIES

D6i/D6 BRACELETS AND STRAPS	
Note: D6i/D6 strap accessory kits do not contain an extension strap	
SS019480000	D6i ALL-BLACK STEEL BRACELET KIT
SS022225000	D6i NOVO BLACK STRAP KIT
SS022222000	D6i NOVO STEALTH STRAP KIT
SS022223000	D6i NOVO WHITE STRAP KIT
SS022221000	D6i NOVO STONE STRAP KIT
SS022816000	D6i NOVO BLACK ZULU STRAP W/ADAPTOR
SS022817000	D6i NOVO BLUE ZULU STRAP W/ADAPTOR
SS022818000	D6i NOVO STEALTH ZULU STRAP W/ADAPTOR
SS018550000	D6i/D6 EXTENSION STRAP KIT WHITE
SS021267000	D6i/D6 ELASTOMER EXTENSION STRAP KIT
SS021268000	D6i/D6 ALL-BLACK EXTENSION STRAP KIT

D4i BRACELETS AND STRAPS	
Note: D4i Novo strap accessory kits do not contain an extension strap	
SS020442000	D4i NOVO STRAP BLACK
SS020443000	D4i NOVO STRAP BLUE
SS020444000	D4i NOVO STRAP LIME
SS020448000	D4i NOVO EXTENSION STRAP BLACK
SS020621000	D4i NOVO EXTENSION STRAP BLUE
SS020622000	D4i NOVO EXTENSION STRAP LIME

ZOOP NOVO/VYPER NOVO STRAPS AND BOOTS	
SS021768000	ZOOP NOVO/VYPER NOVO - BOOT FOR CB (COMBO)
SS021767000	ZOOP NOVO/VYPER NOVO - RUBBER BOOT FOR COMPUTER
SS021886000	ZOOP NOVO/VYPER NOVO - BUNGEE ADAPTOR KIT
SS021765000	ZOOP NOVO/VYPER NOVO - STRAP KIT

HelO2/VYPER AIR/VYTEC/VYPER2/VYPER/GEKKO/ZOOP STRAPS AND BOOTS	
SS0V5841000	HELO2/VYPER/GEKKO/ZOOP STRAP COMPLETE (INCL. BUCKLE + 2 SPRINGBARS)
SS013194000	VYPER2/VYPER AIR STRAP SET
SS020628000	DIVE BUNGEE BOOT

HP HOSES	
SS019687000	HP HOSE 33" MIFLEX KIT
SS019688000	HP HOSE 6" MIFLEX KIT

OTHER STRAPS AND BOOTS	
SS0K5512000	ELASTOMER STRAP FOR SK-7/SK-8/ SM-16
SS0K6018000	WRIST MOUNT BOOT FOR SK-7/SK-8
SS005236000	CB-IN-LINE BOOT FOR SM-16/VYPER/ ZOOP
SS020627000	COMPASS BUNGEE BOOT FOR SK-7/ SK-8
SS021495000	DIVE COMPUTER SLEEVE

SUUNTO PRODUCT SPECIFICATIONS

EON BLACK

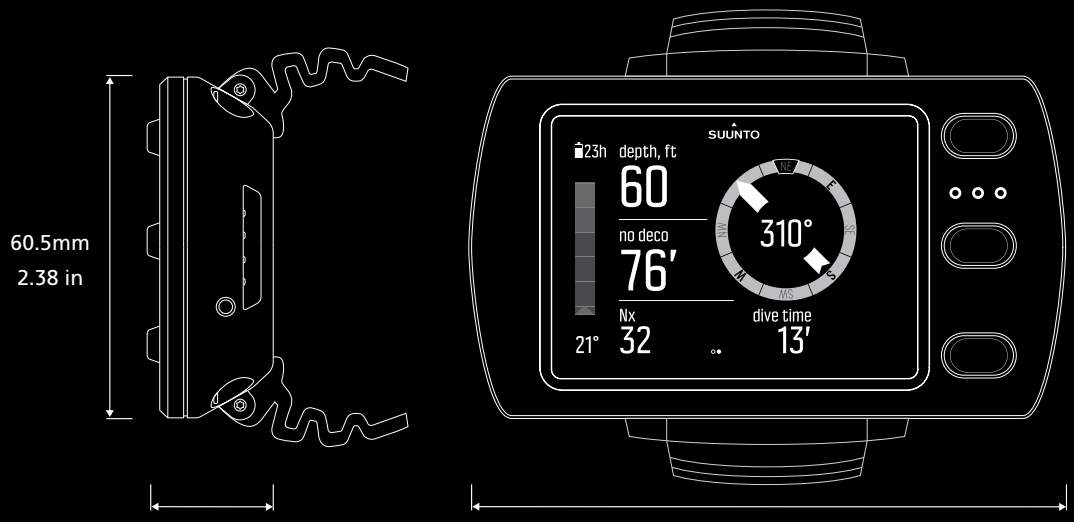

EON CORE

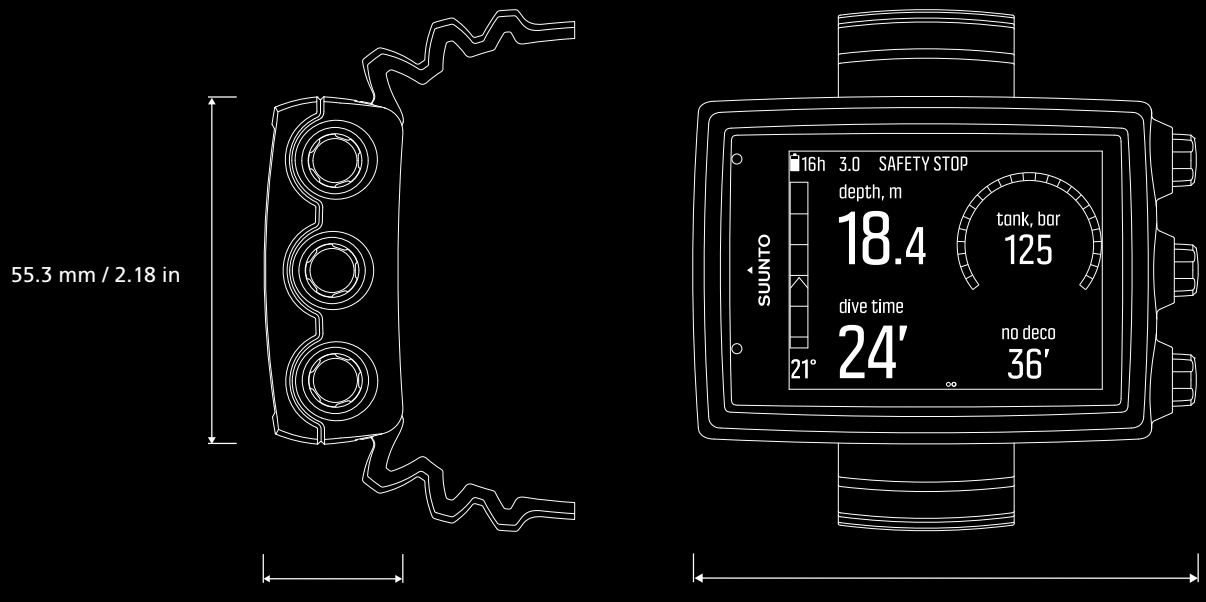

SUUNTO PRODUCT SPECIFICATIONS

DX

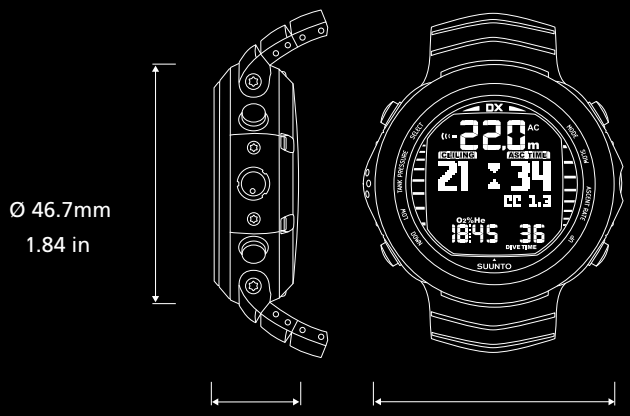

D6i NOVO

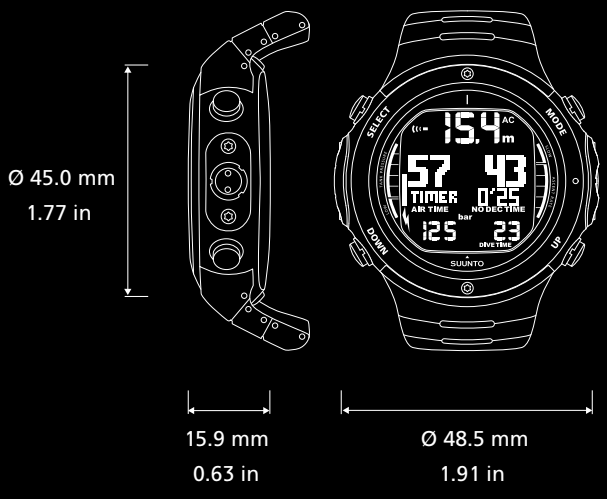

SUUNTO PRODUCT SPECIFICATIONS

D5

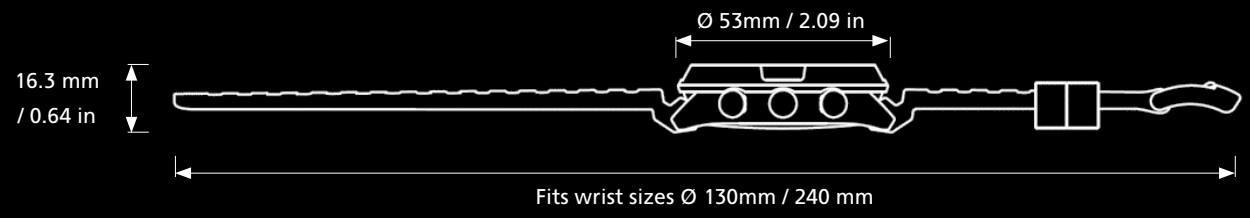

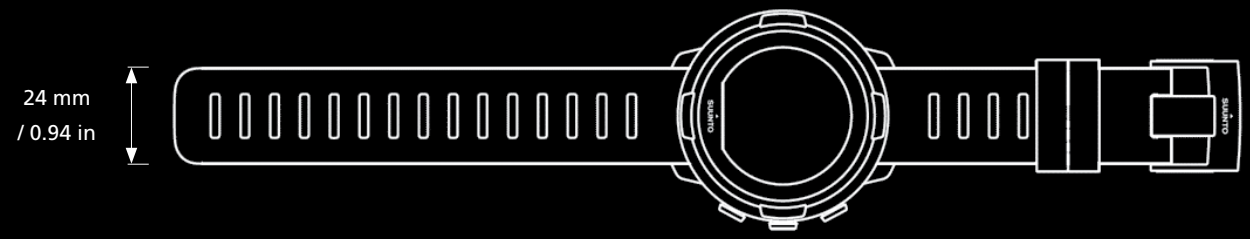

D4i SILICONE

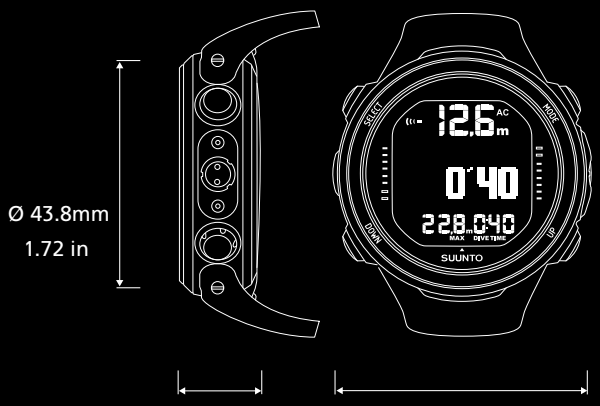

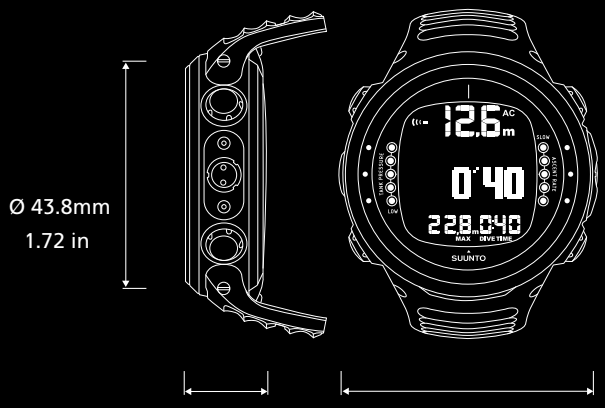

VYPER NOVO LITE

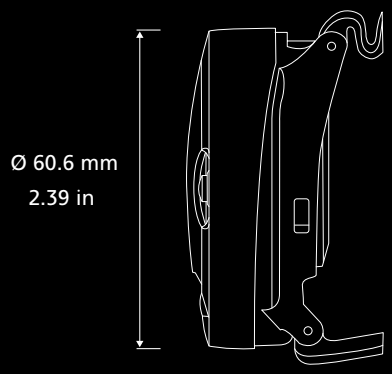

SUUNTO PRODUCT SPECIFICATIONS

D4F

ZOOP NOVO

COBRA3

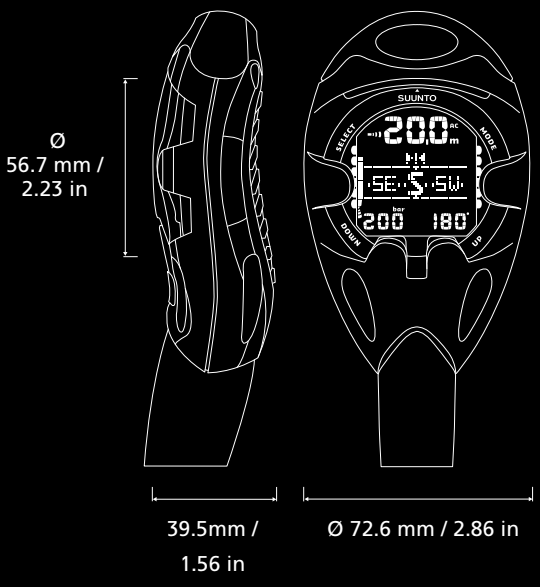

NOTES